TBG08001U#$$

GC
Tub Spout (Square)

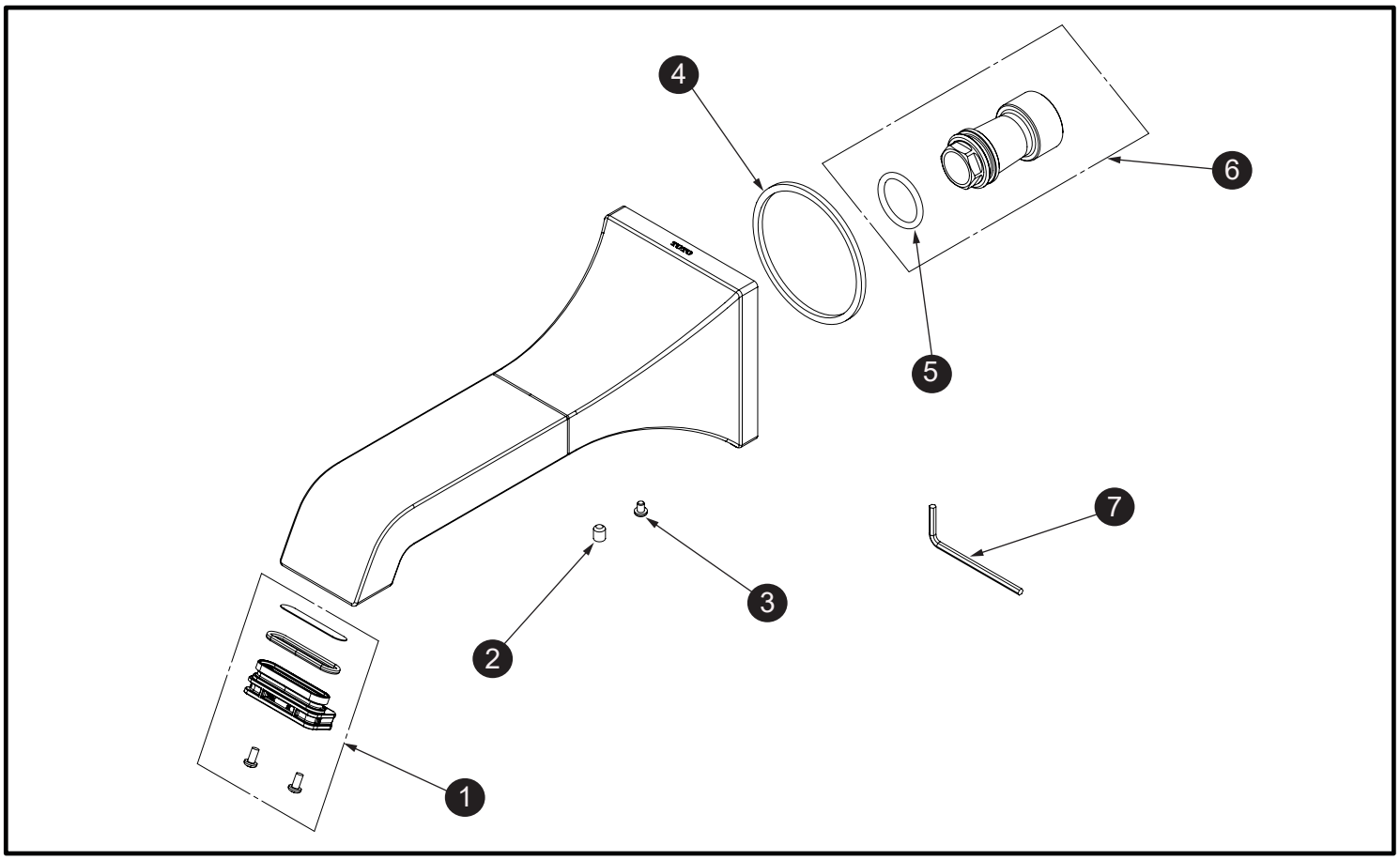

Item	Part	Description
1	THP5514	Aerator
2	THP5110	Set Screw
3	THP5311	Anti-dropping screw
4	THP5312	Foam
5	THP5313	O-Ring
6	THP5314	Pipe Adapter
7	THP5315	Hex Wrench

LEGEND
$$ = Denotes Finish
#CP = Polished Chrome
#BN = Brushed Nickel
#PN = Polished Nickel